dyson pure hot+cool

Dyson Pure Hot+Cool™

User manual

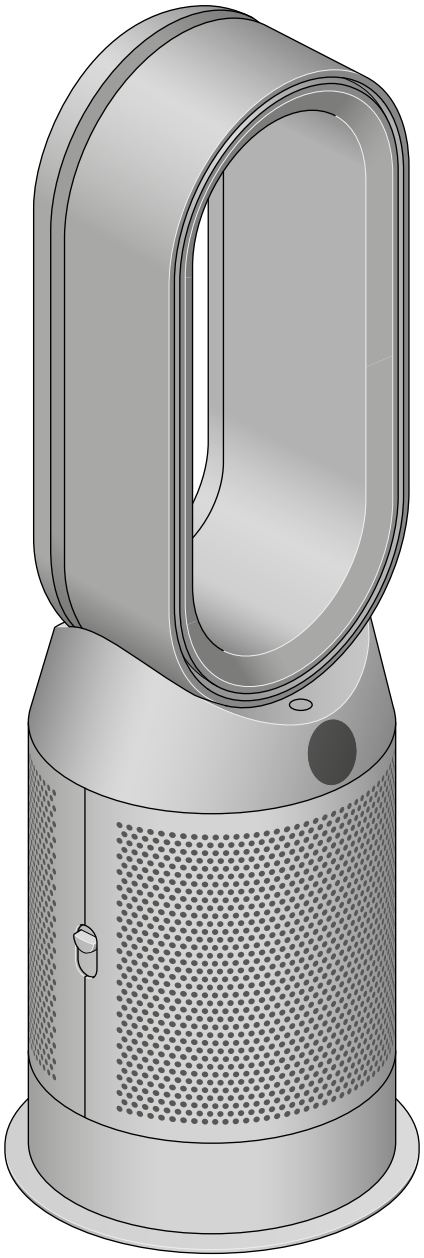

The Dyson Pure Hot plus Cool™ purifier fan heater, with the amplifier loop and mesh filter cover, screen below the loop amplifier and outer cover release button on the side.

Contents

Assembling your machine
Getting started
Power and continuous monitoring
Information menu
Auto mode
Airflow speed and direction
Oscillation
Night mode
Sleep timer
Heating and Cooling modes
Changing your HEPA+Carbon filter
Resetting your HEPA+Carbon filter life
Changing your HEPA and carbon filters
Resetting your HEPA and carbon filter life
Looking after your machine

Assembling your machine

Use both hands to lift your machine out of the box, by its base.

Do not lift out by the loop amplifier.

Assemble your machine with the filters that are supplied.

Dyson Pure Hot+Cool
Supplied with a HEPA+Carbon filter.

Push your HEPA+Carbon filter into the outer cover and position onto the base. Push firmly until both outer covers click securely into place.

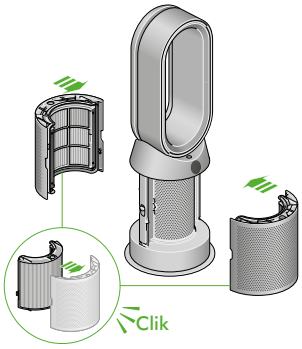

The air purifier fan heater with the filter covers open showing a HEPA plus carbon filter located in the filter covers. Arrows demonstrate that the filter covers will need to be assembled onto the base of the machine.

Dyson Pure Hot+Cool
Supplied with separate HEPA and carbon filters.

Push the carbon filters into place on the machine.

Push the HEPA filter into the outer cover. Put the outer covers into position on the base and push firmly until they both click securely into place.

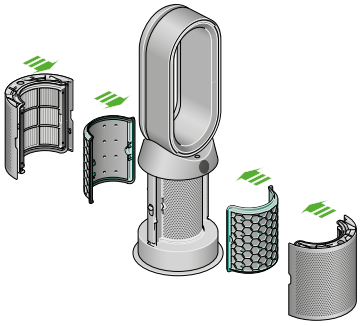

The air purifier fan heater with the filter covers open showing a HEPA filter located in the filter covers and a carbon filter. Arrows demonstrate that the carbon filter is fitted directly to the base of the machine and the filter covers will need to be assembled onto the base of the machine.

Getting started

Place the remote control on top of the machine with the buttons facing down.

Plug in and switch on.

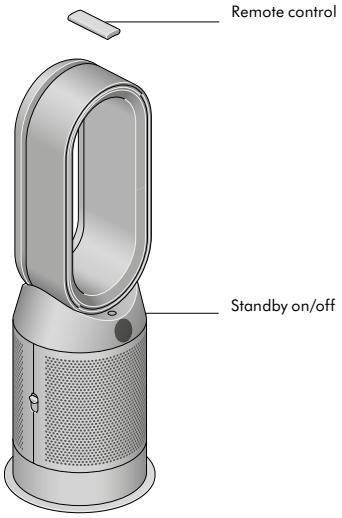

An image of the air purifier fan heater with the remote placed on the top of the loop amplifier and the location of the standby on/off button on the top of the base of the machine.

The layout of the remote control with the standby button on the top left, the airflow speed toggle button in the middle left with the Auto mode button below, then the Oscillation button and then at the bottom is the Sleep timer button. On the top right-hand side is the Information menu button, then going downwards is the Heating control button, Cooling mode button, Airflow direction and then Night mode button at the bottom.

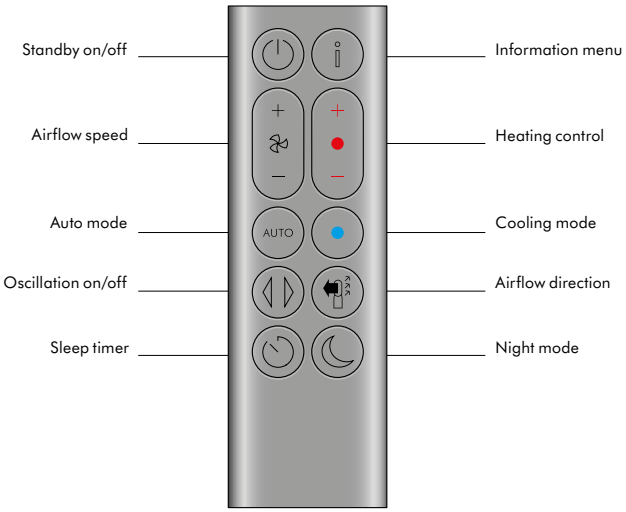

Power and continuous monitoring

Stand-by on/off
Press the Standby on/off button on your Dyson purifying fan heater or remote control to stop your machine. It will continue to monitor the air quality.

Continuous monitoring
Continuous monitoring is turned off by default. Once turned on, it will always be active until you turn it off again.

With continuous monitoring turned on, your Dyson purifying fan heater will gather air quality, temperature and humidity information, which is displayed on the LCD screen.

Continuous monitoring
Press and hold the Auto mode button on the remote control for 5 seconds to turn it on. The LCD screen will indicate when continuous monitoring is on or off.

Information menu

Press this button to scroll through the information being monitored by your Dyson purifying fan heater.

Information about air quality, temperature, humidity and filter levels is shown on the LCD screen.

When a particular type of pollutant causes air quality to decrease, a symbol for the pollutant will show on the LCD screen.

The remote control with the information button on the top right.

Indoor air quality - 12 seconds
Monitor the current air quality with a graph showing the last 12 seconds of data.

Particulate matter (PM10)
Larger microscopic particles up to 10 microns in size, suspended in the air we breathe. These include dust, mould and pollen.

Nitrogen dioxide and other oxidising gases
These potentially harmful gases are released into the air by combustion, for example, the burning gas when cooking and in vehicle exhaust emissions.

Indoor humidity
The amount of water vapour in the air, shown as a percentage.

Formaldehyde (HCHO)
A common indoor pollutant. It can be released for many years from furnishings, floorings and glue.

Particulate matter (PM2.5)
Microscopic particles up to 2.5 microns in size, suspended in the air we breathe. These include smoke, bacteria and allergens.

Volatile organic compounds
VOCs are typically odours that may be potentially harmful. These can be found in cleaning products, paints and furnishings.

Indoor temperature
Monitor the ambient temperature to help maintain a comfortable environment.

Filters
The remaining filter life is shown on the LCD screen and will indicate when your filters need replacing.

Auto mode

Set your Dyson purifying fan heater to Auto mode and the on-board sensors will intelligently adjust the settings of the machine according to the air quality.

Air quality: your machine will pause when the target air quality has been reached, switching on again when the air quality levels drop.

Airflow speed: the airflow speed will increase until the target air quality and temperature have been reached.

The remote control with the Auto mode button below the Airflow speed button on the left.

Airflow speed and direction

Press the Airflow speed button to increase and decrease the airflow speed.

Press the Airflow direction button to change the direction of airflow from front to back.

Change the airflow direction for your personal comfort.

Select the Airflow direction to Fan mode for airflow from the front for purifying, cooling and heating.

The remote control with the Airflow speed toggle button on the left hand side, below the standby button. The Airflow direction button is on the right above the Night mode button.

Oscillation

Press the Oscillation button to circulate the air around the room and scroll through the oscillation settings from 0° to 350°.

The remote control with the oscillation button on the left above the sleep timer.

Night mode

In Night mode, your Dyson purifying fan heater will continue to monitor and respond to changes in air quality, but only using its quietest settings – and with its LCD screen dimmed.

The remote control with the Night mode button on the right at the bottom.

Sleep timer

Your Dyson purifying fan heater will turn off automatically after the selected amount of time.

To set the time: press the button to scroll through the time options. Once activated, press the Sleep timer button once to see the time selected.

To cancel the Sleep timer: press the Sleep timer button twice.

The remote control with the sleep timer button on the bottom left.

Heating and Cooling modes

Press the button to set the required room temperature.

Your machine will pause when the temperature set has been reached.

Press the Cooling mode button to switch your machine from heating mode to cooling mode.

The remote control with the Heating mode button on the right, below the Information button. The Cooling mode button is immediately below the Heating mode button.

Changing your HEPA+Carbon filter

Before changing your filter, switch off and unplug your Dyson purifier fan heater.

The remaining filter life is displayed on the screen and will indicate when your non-washable filters need replacing. Press the Information button on your remote.

You'll need to reset the filter life on your machine.

Dyson Pure Hot+Cool
Supplied with a HEPA+Carbon filter.

To change your HEPA+Carbon filter, push down on the buttons either side of your machine to release the outer cover. Push down on the tabs to remove the filter.

Push the replacement filter into the outer cover and make sure the tabs click into place.

Put the outer covers into position on your machine and push firmly until they both click securely into position.

Plug in and switch your machine, and reset your filter life.

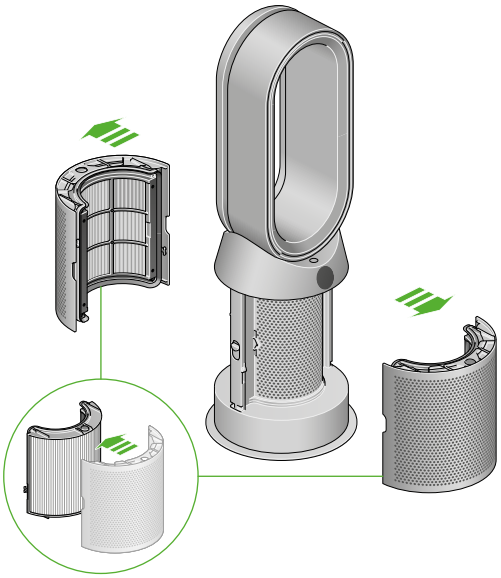

The air purifier fan heater with the filter covers open showing a HEPA plus carbon filter located in the filter covers. Arrows demonstrate that the filter covers will need to be assembled onto the base of the machine.

Resetting your HEPA+Carbon filter life

It's important to reset your filter life after you have replaced your filter.

Resetting your HEPA+Carbon filter life
Press and hold the Night mode button on your remote control.

The display on your machine will countdown from five, the filter life will be reset and your machine is ready to use.

Pressing the night mode button on the bottom right of the remote control for 5 seconds.

Changing your HEPA and carbon filters

Before changing your filter, switch off and unplug your Dyson purifier fan heater.

The remaining filter life is displayed on the screen and will indicate when your non-washable filters need replacing. Press the Information button on your remote.

You'll need to reset the filter life on your machine.

Dyson Purifier Hot+Cool Auto React
Supplied with separate HEPA and carbon filters.

To change your HEPA filter, push down on the buttons either side of your machine to release the filter covers. Push down on the tabs to remove the HEPA filter.

Push the replacement filter into the outer cover and make sure the tabs click into place.

To change the carbon filter from your machine, remove the filter from the base of your machine and insert the replacement filter.

Put the outer covers into position on your machine and push firmly until they both click securely into position.

Plug in and switch your machine, and reset your filter life.

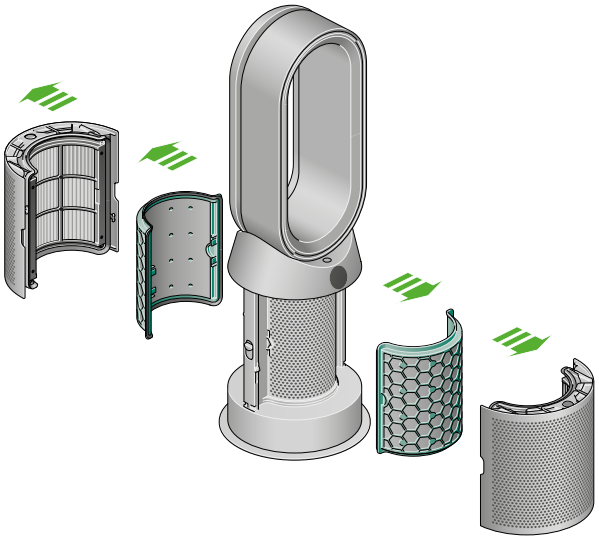

The air purifier fan heater with the filter covers open showing a HEPA filter located in the filter covers and a carbon filter. Arrows demonstrate that the carbon filter is fitted directly to the base of the machine and the filter covers will need to be assembled onto the base of the machine.

Resetting your HEPA and carbon filter life

It's important to reset your filter life after you have replaced your filter.

Resetting your HEPA filter life
Press and hold the Night mode button on your remote control.

The display on your machine will countdown from five, the filter life will be reset and your machine is ready to use.

Resetting your carbon filter life
Press and hold the Oscillation button on your remote control.

The display on your machine will countdown from five, the filter life will be reset and your machine is ready to use.

Pressing the night mode button on the bottom right of the remote control for 5 seconds.

Pressing the Oscillation button on the bottom left of the remote control, above the sleep timer button, for 5 seconds.

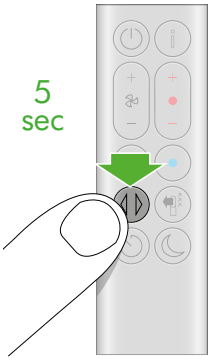

Looking after your machine

To always get the best performance from your Dyson purifying fan heater, it's important to regularly clean it and check for blockages.

Cleaning your machine

If your machine is dusty, wipe with a damp lint-free cloth.

Look for blockages in the air inlet holes on the filter and the small aperture inside the loop amplifier.

Use a soft brush to remove dust and debris.

Don't use detergents or polishes to clean your machine.

Error codes

If your machine shows an error code, try turning it off and then on again. If this doesn't clear the error code contact Dyson Customer Care.

For more information and support for your machine go online: www.dyson.com/support